Type

Project

Notes

AP-FR4E

Round Downlight Regressed Trim

Housing-free light engine install quickly.

Ease of installation, fast-mount features.

*Ra80 is only with 2700K and 3000K

RoHS COMPLIANT · c UL us LISTED · IP20 RATED & TESTED · 5 YEARS LIMITED WARRANTY INCLUDED

TECHNICAL DRAWING

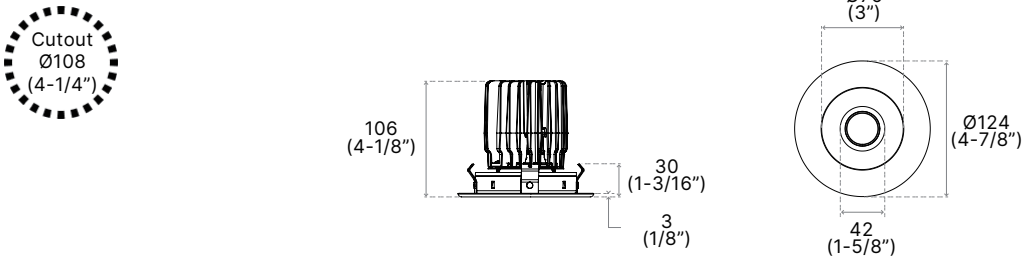

Units in Metric

PRODUCT SPECIFICATIONS

Summary	AP-FR-4E-10	AP-FR-4E-15
Dimensions	Ø124mm x 106mm	Ø124mm x 106mm
Power Consumption	10 W	15 W
Lumen Output	764 lm	1048 lm
Input Voltage	120-277V AC	120-277V AC
Colour Temperature	2700K, 3000K, 3500K, 4000K	2700K, 3000K, 3500K, 4000K, WD
Finish	Gold, Chrome, White, Brushed Nickel, Satin Nickel, Black	Gold, Chrome, White, Brushed Nickel, Satin Nickel, Black
CRI	*Ra80, Ra90	*Ra80, Ra90
Beam Angle	16° (Spot), 32° (Narrow Flood), 48° (Flood)	16° (Spot), 32° (Narrow Flood), 48° (Flood)
Warranty	5 Years	5 Years

ORDER FORM

1	2	3	4	5	6	7	8	9

1. FAMILY	2. SIZE	3. WATTAGE	4. VOLTAGE	5. CCT			
AP-FR	**4E** Ø124 x 106	**10** 10W **15** 15W	**A** 120-277V AC	**27** 2700K **30** 3000K	**35** 3500K **40** 4000K	**WD** Warm Dimming (15W Only)	

6. CRI		7. BEAM ANGLE				8. TRIM FINISH						9. REFLECTOR			
80	*Ra80	**16**	16°	**48**	48°	**GD**	Chrome	**SN**	Satin Nickel	**WH**	White	**WH**	White	**BK**	Black
90	Ra90	**32**	32°			**CH**	Aluminum	**BN**	Brushed Nickel	**BK**	Black	**AN**	Natural Anodized		

advantlighting.ca
(604) 207 9879

© Advant Lighting, LTD. All rights reserved. We reserve the right to change design, materials and finish in any way that will not alter installed appearance or reduce function and performance.

#105-8288 North Fraser Way,
Burnaby, BC V3N 0E9

Type

Project

Notes

OPTIONS & ACCESSORIES

MOUNTING PLATE

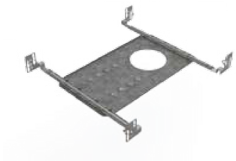

Ideal for unfinished basements and other renovation projects.
Choice of Square or Round for 3.5" Remodel housings.
Adjustable mounting bars included.

CODE	DESCRIPTION	HOLE DIAMETER	DIMENSIONS
P4RN	Without Mounting Bars	Ø108 (4-1/4”)	165 x 337 (6-1/2” x 13-1/4”)
P4RNW	With Mounting Bars	Ø109 (4-5/16”)	388 x 254 ~ 622 (15-5/16” x 10” ~ 24-1/2”)

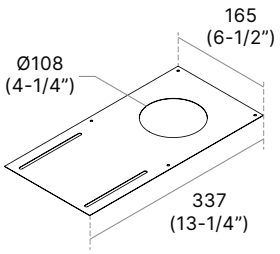

P4RN

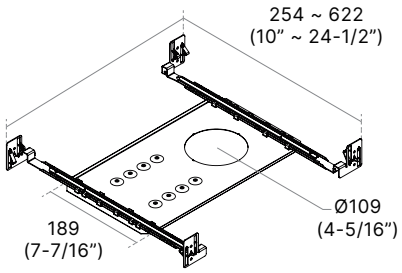

P4RNW

LENSES

Choice of replacement lenses for on-site modification of light diffusion.
Shower Light trims available only with Frosted lens.
*Wall Wash trims available only with Frosted/Frosted lens.

CL Clear

FR Frosted

LN Linear

FC Frosted Clear Center

SL Solite

PR Prismatic

HC Honeycomb

© Advant Lighting, LTD. All rights reserved. We reserve the right to change design, materials and finish in any way that will not alter installed appearance or reduce function and performance.

#105-8288 North Fraser Way,
Burnaby, BC V3N 0E9

Type

Project

Notes

HOUSINGS

REMODEL IC

REUR	4	V	

1. MODEL	2. SERIES	3. VOLTAGE	4. DIMMING	
REUR Remodel Housing	**4** 4”	**V** 120-277V AC	**E1** ELV 10W **E2** ELV 15W **EB2** ELV (+VALUE) 15W	**D1** 0-10V 10W **D2** 0-10V 15W **ND** Non-dimmable 15W

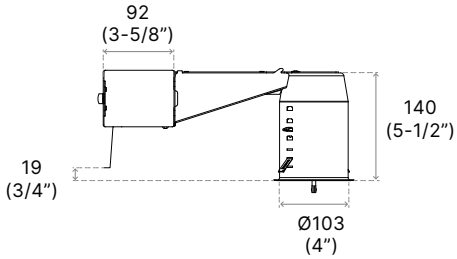

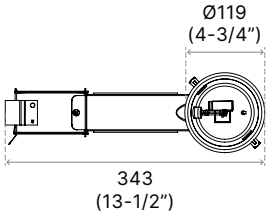

NEW CONSTRUCTION IC

NWUR	4	V		

1. MODEL	2. SERIES	3. VOLTAGE	4. DIMMING	
NWUR New Construction Housing	**4** 4”	**V** 120-277V AC	**E1** ELV 10W **E2** ELV 15W **EB2** ELV (+VALUE) 15W	**D1** 0-10V 10W **D2** 0-10V 15W **ND** Non-dimmable 15W

5. OPTION

EM Emergency Back up

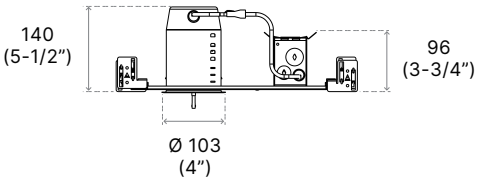

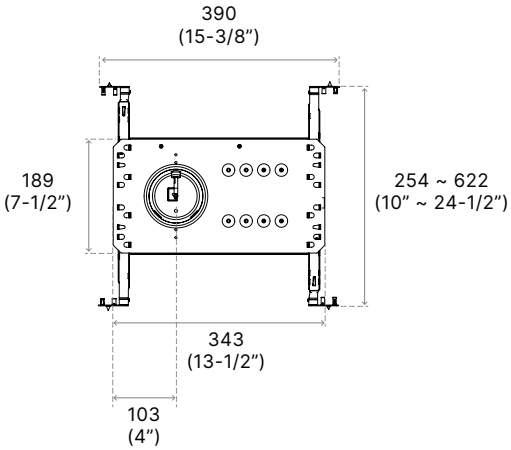

© Advant Lighting, LTD. All rights reserved. We reserve the right to change design, materials and finish in any way that will not alter installed appearance or reduce function and performance.

#105-8288 North Fraser Way,
Burnaby, BC V3N 0E9

Type

Project

Notes

HOUSINGS

Classic New Construction IC

ISUR	4	V	

1. MODEL		2. SERIES		3. VOLTAGE		4. DIMMING			
ISUR	IC and Air Tight Housing	**4**	4”	**V**	120-277V AC	**E1**	ELV 10W	**D1**	0-10V 10W
						E2	ELV 15W	**D2**	0-10V 15W
						EB2	ELV (+VALUE) 15W	**ND**	Non-dimmable 15W

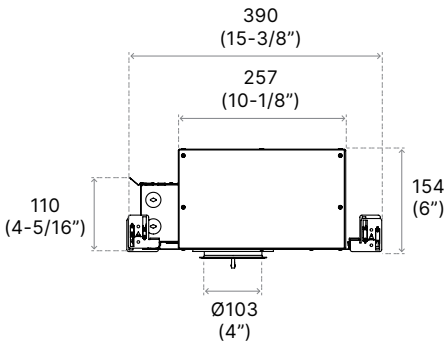

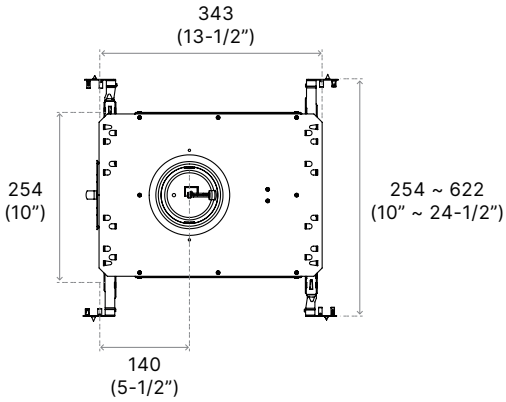

© Advant Lighting, LTD. All rights reserved. We reserve the right to change design, materials and finish in any way that will not alter installed appearance or reduce function and performance.

#105-8288 North Fraser Way,
Burnaby, BC V3N 0E9